CCD-18

CAPACITIVE PROXIMITY SENSOR - DC INPUT

Features

- PROTECTION : Short-circuit, Surge Absorber, Reverse connection
- Red Led Display Can Detect Sensor Work Status
- Easy To Set Up And Adjust Distance
- Waterproof, Anti Oil, Temperature And Other Advantages
- IP67 Protection Structure (IEC Specification)
- 1 Year Warranty

CE

GENERAL CHARACTERISTICS

Detecting Distance	NON FLUSH	8mm ± 10%
Frequency (Hz)		50Hz
Movement Differential	Max.10% of detecting distance	
Standard Detected Target	Iron 50x50mm	

OPERATING CHARACTERISTICS

Supply Voltage (V)	10-30VDC
Current Consumption (mA)	10mA max
Load Current (mA)	200mA max
Voltage Drop (Vp)	1.5V max

ENVIRONMENT

Operating Temperature	-25ºC to + 70ºC (non freezing condition)
Ambient Humidity	35% to 95% RH
Insulation Resistance	Min 50MΩ/500VDC
Dielectric Strength	1500VAC 50/60Hz for 1 minute

OTHER CHARACTERISTICS

Indicator	Operating	Red LED
Material	Case	BRASS
	Detecting surface	ABS
Connection Mode		2M lead wire type
Protection Grade		IP65 (IEC Specification)
Authentication		CE

PROTECTION & SECURITY

Protection Circuit	Reverse Polarity Protection, Surge Absorber, Short Circuit Protection
Vibration	1mm amplitude at 10 ~ 55Hz Frequency for 120 min each in X, Y, Z Directions
Shock	500m/s² (50G) for 3 times in X, Y, Z Directions

ORDER CODE

MODEL(Ø18mm)	TYPE	LOGIC	OUTPUT	MOUNT	RANGE
CCD18-P8-OC	DC	PNP	NO+NC	NON FLUSH	8mm
CCD18-N8-OC		NPN			
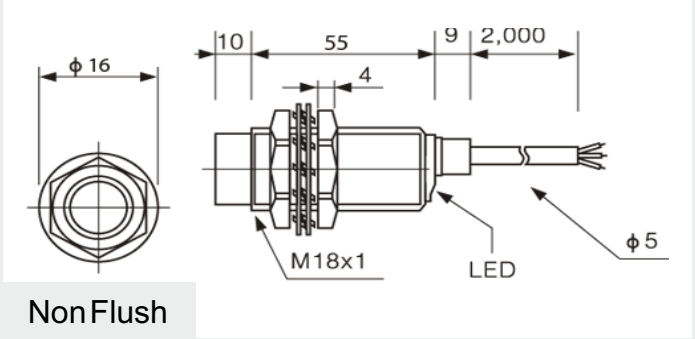
DIMENSIONS